baumann
Doğru Pencere



PRODUCT **BROCHURE**





CONTENTS

The Right Window 3
Momentum 5
Momentum Profiles 7
Dinamic 9
Dinamic Profiles 11
Energy 13
Energy Profiles 15
Kinetic 17
Kinetic Profiles 19
Easy Slide 20
Easy Slide Profiles 22
Isotherm 24
Isotherm Profiles 26
Color Chart 28
Notes 30

The Right Window

BAUMANN

At Baumann, we export our window and door systems to dozens of countries across 3 continents, and across Türkiye we bring them to users through carefully selected partners. Guided by Eseren Group's goal of strengthening the perception of Turkish-made products in global markets, we build on sustainable quality at every stage, from production to service.

THE RIGHT WINDOW

We deliver the right window by designing the process right from start to finish, manufacturing it right and installing it right.

SELECTED PARTNERS

We build our partner network according to defined standards and work only with partners who meet them.

HARMONY

We manage our processes within a planned and disciplined structure. By sharing the same approach with our partners, we ensure consistency at every stage, and by moving in harmony with all our stakeholders, we guarantee that the end result reflects the same quality at every point.

EMPATHY

We put people at the heart of our business and make our decisions by understanding our users and partners. We analyze needs accurately and shape our solutions accordingly.





momentum



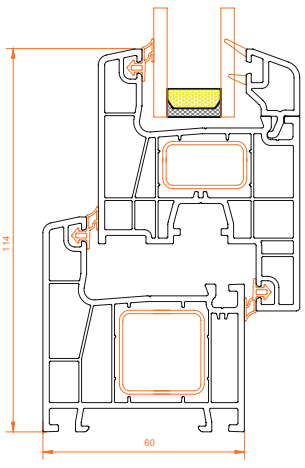

Window Assembly

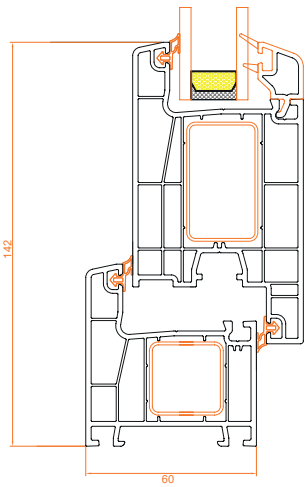

Door Assembly

TECHNICAL DATA

Profile Width: 60
Number of Chambers: 4
Profile Class: Class C (TS EN 12608-1)
Gasket System: Inner-Outer Double
Glass Thicknesses (mm): 4, 20, 24 mm
Insulation Value: Uf 1.45 W/m²K
Profile Wall Thickness: 2.0

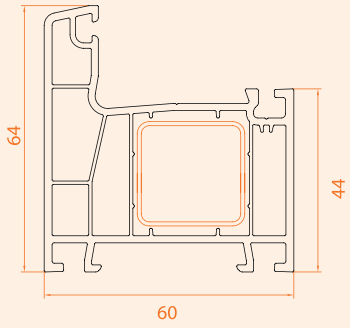

Frame Profile
4 Chambers

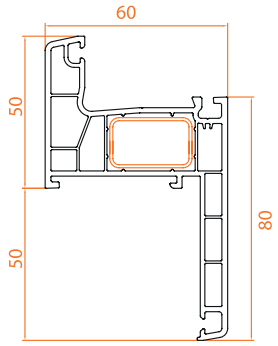

Frame Profile with Sill
4 Chambers

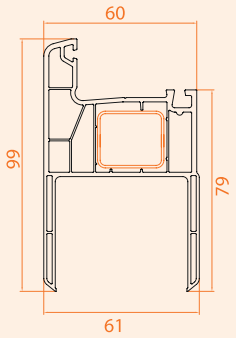

Frame with Double Sill
4 Chambers

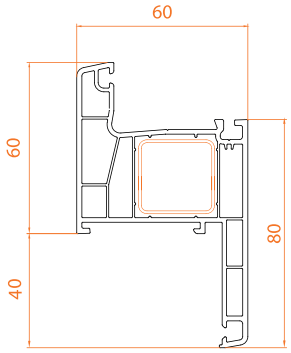

Super Frame with Sill
4 Chambers

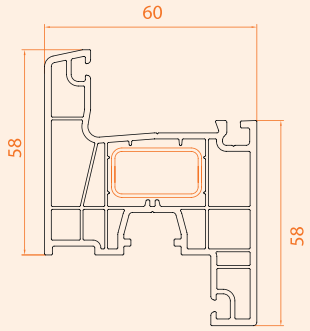

Sash Profile
4 Chambers

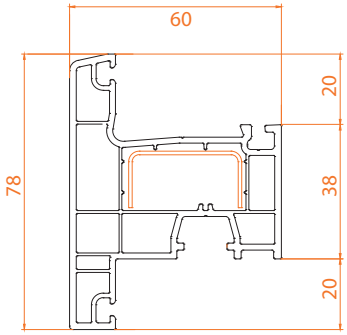

Outward Opening Sash
3 Chambers

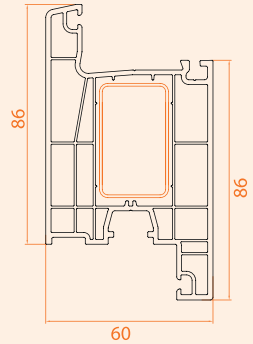

Door Sash Profile
4 Chambers

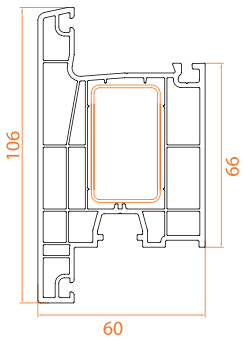

Outward Door Sash
4 Chambers

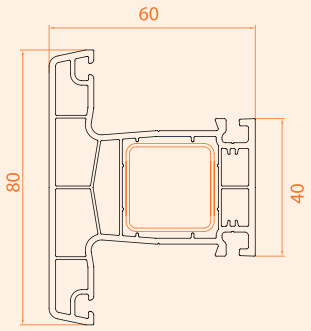

Mullion Profile
4 Chambers

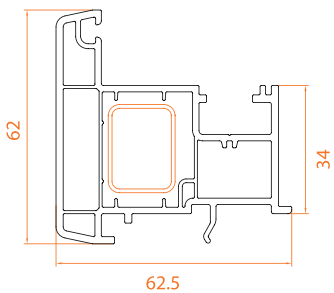

Moving Mullion

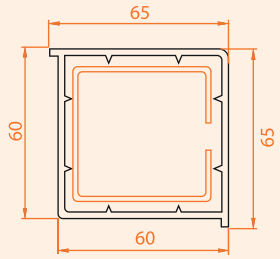

90° Corner Profile
60 mm

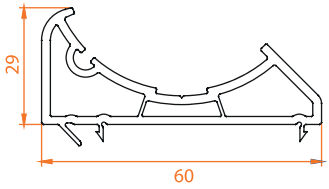

Angled Pipe Profile Adaptor
60 mm

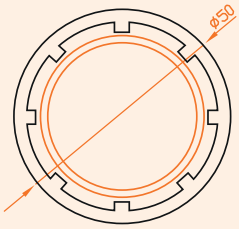

Angled Pipe Profile
60 mm

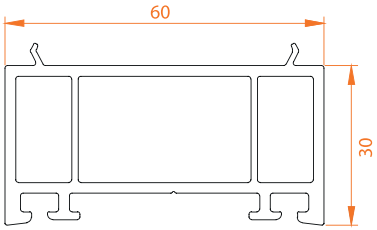

35 mm Frame Lifting Profile

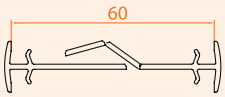

Universal Coupling Profile

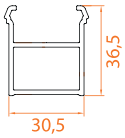

Frame Montage Profile

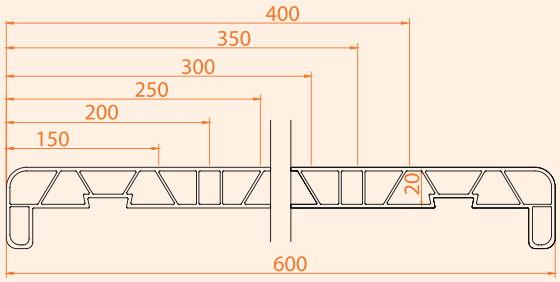

uPVC Window Sill Profile
600 mm

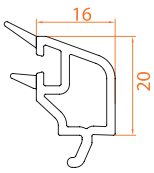

24 mm Double Glazing Bead

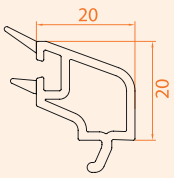

20 mm Double Glazing Bead

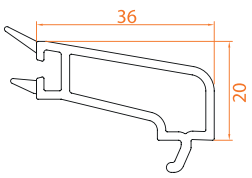

4-6 mm Single Glazing Bead



dinamic



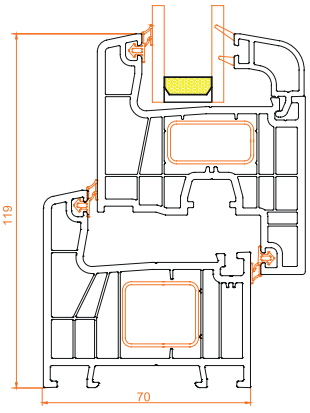

Window Assembly

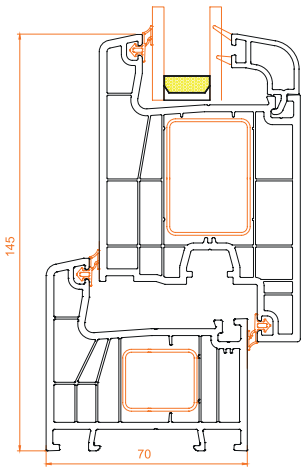

Door Assembly

TECHNICAL DATA

Profile Width: 70
Number of Chambers: 6
Profile Class: Class A (TS EN 12608-1)
Gasket System: Inner-Outer Double
Glass Thicknesses (mm): 4, 20, 24, 32 mm
Insulation Value: Uf 1.23 W/m²K
Profile Wall Thicknesses: 2.0, 2.3, 2.4, 2.8

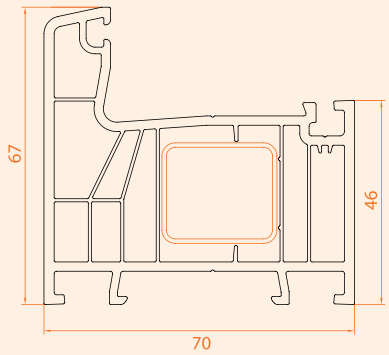

Frame Profile
6 Chambers

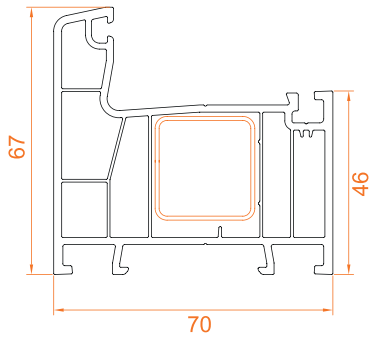

Frame Profile
5 Chambers

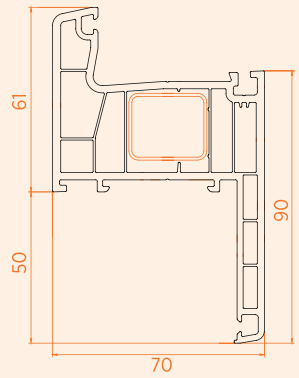

Frame Profile with Sill
5 Chambers

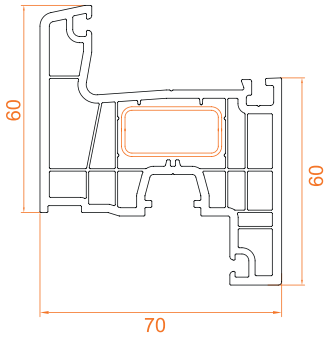

Sash Profile
5 Chambers

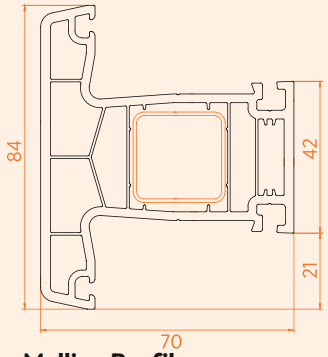

Mullion Profile
5 Chambers

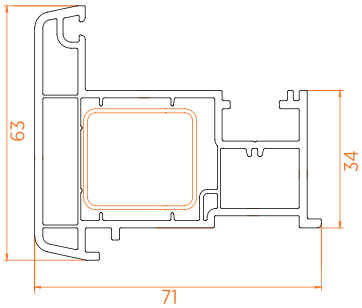

Moving Mullion Profile

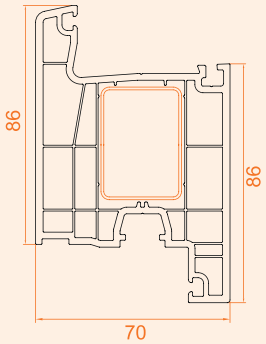

Door Sash Profile
4 Chambers

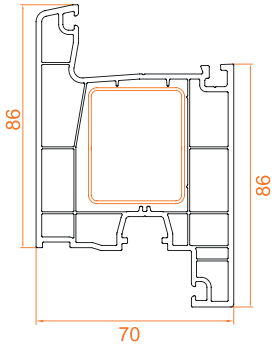

Door Sash Profile
3 Chambers

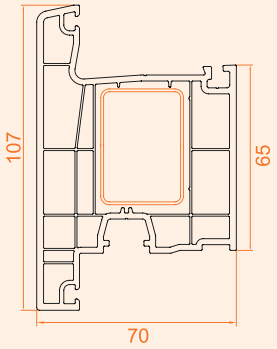

Outward Door Sash
4 Chambers

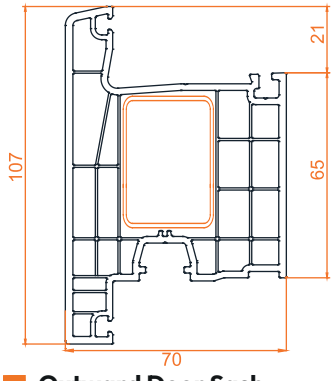

Outward Door Sash
5 Chambers

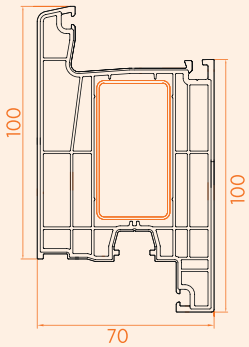

Wide Door Sash Profile
5 Chambers

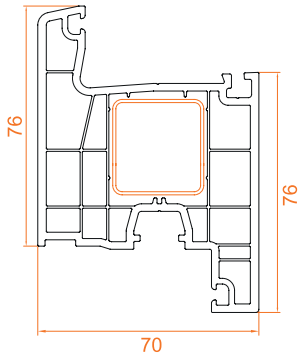

Narrow Door Sash Profile
4 Chambers

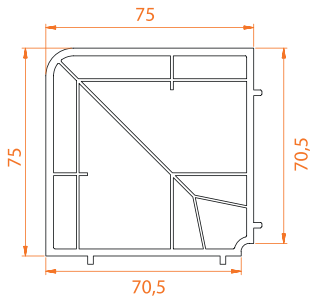

90° Corner Profile

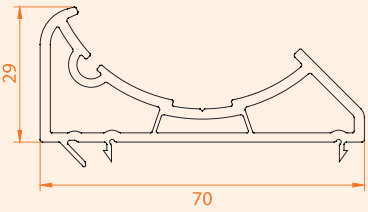

Angled Pipe Profile Adaptor
70 mm

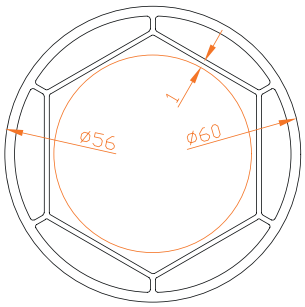

Angled Pipe Profile

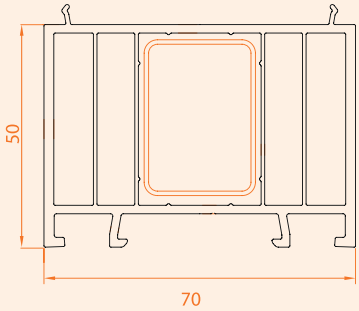

Frame Lifting Profile
50 mm

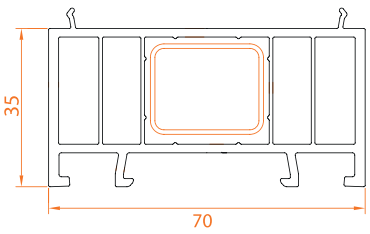

Frame Lifting Profile
35 mm

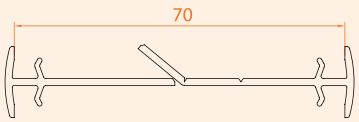

Universal Coupling Profile

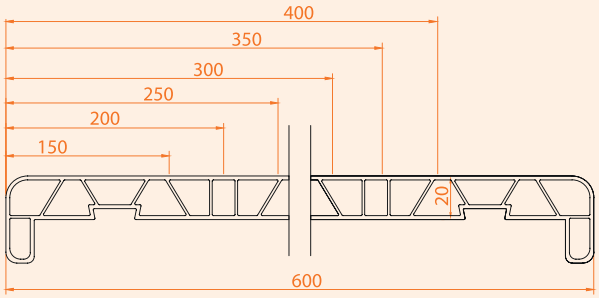

uPVC Window Sill Profile
600 mm

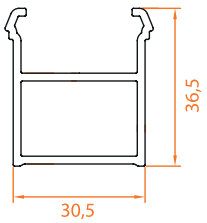

Frame Montage Profile

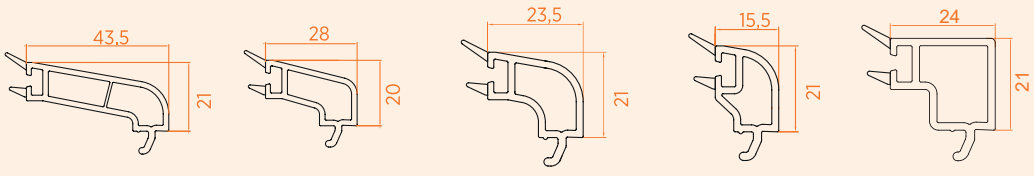

- **4 mm** Single Glazing Bead
- **20 mm** Double Glazing Bead
- **24 mm** Double Glazing Bead
- **32 mm** Triple Glazing Bead
- **24 mm** Square Bead



energy



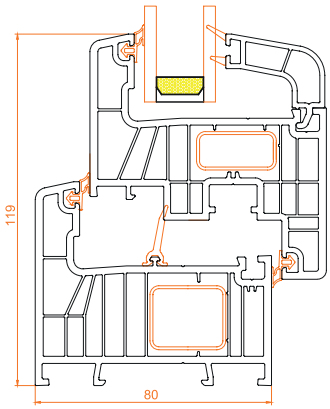

Window Assembly

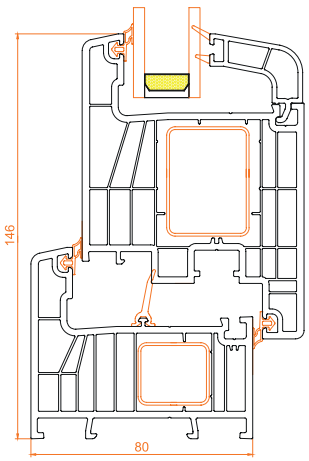

Door Assembly

TECHNICAL DATA

Profile Width: 80
Number of Chambers: 8
Profile Class: Class A (TS EN 12608-1)
Gasket System: Inner-Outer Triple
Glass Thicknesses (mm): 24, 44 mm
Insulation Value: Uf 0.97 W/m²K
Profile Wall Thicknesses: 2.2, 2.8

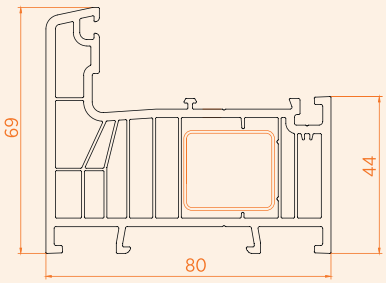

Frame Profile
8 Chambers

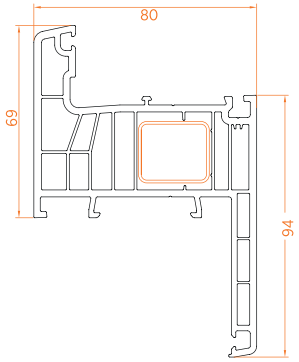

Frame Profile with Sill
8 Chambers

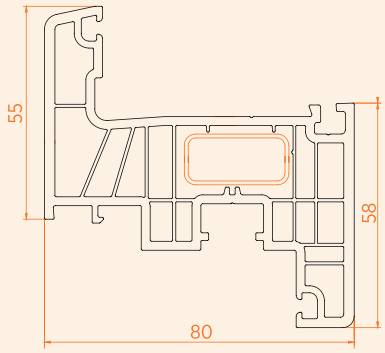

Sash Profile
7 Chambers

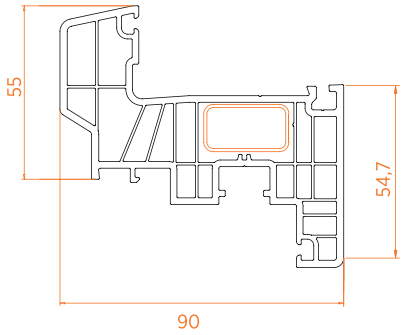

Drip Cap Sash
8 Chambers

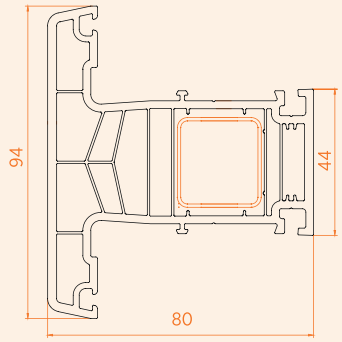

Mullion Profile
7 Chambers

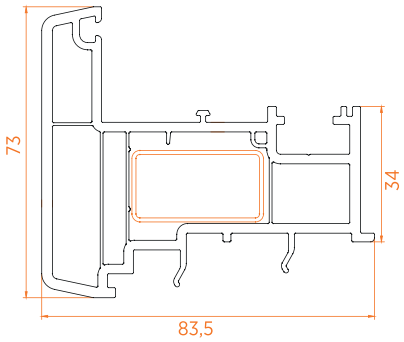

Moving Mullion Profile

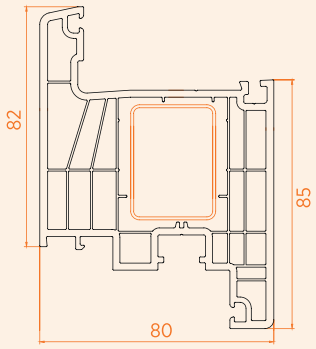

Door Sash Profile
6 Chambers

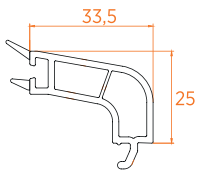

24 mm Double Glazing Bead

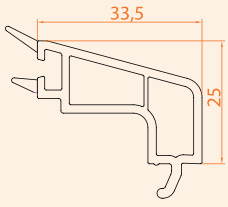

24 mm Decorative Glazing Bead

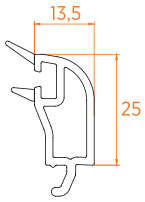

44 mm Triple Glazing Bead

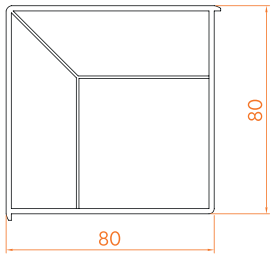

90° Corner Profile

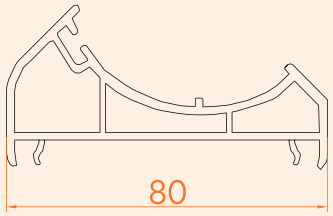

Angled Pipe Profile Adaptor
80 mm

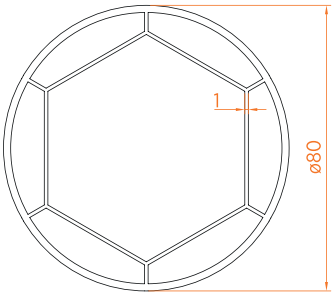

Angled Pipe Profile

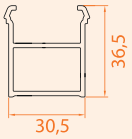

Frame Montage Profile

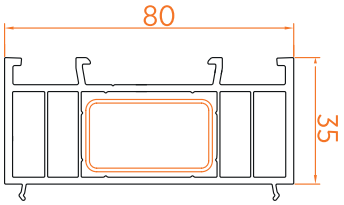

Frame Lifting Profile
35 mm

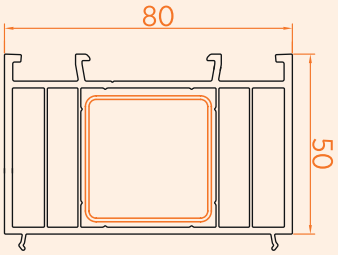

Frame Lifting Profile
50 mm

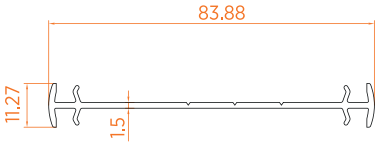

Universal Coupling Profile

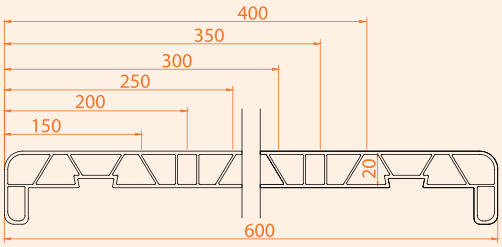

uPVC Window Sill Profile
600 mm



kinetic

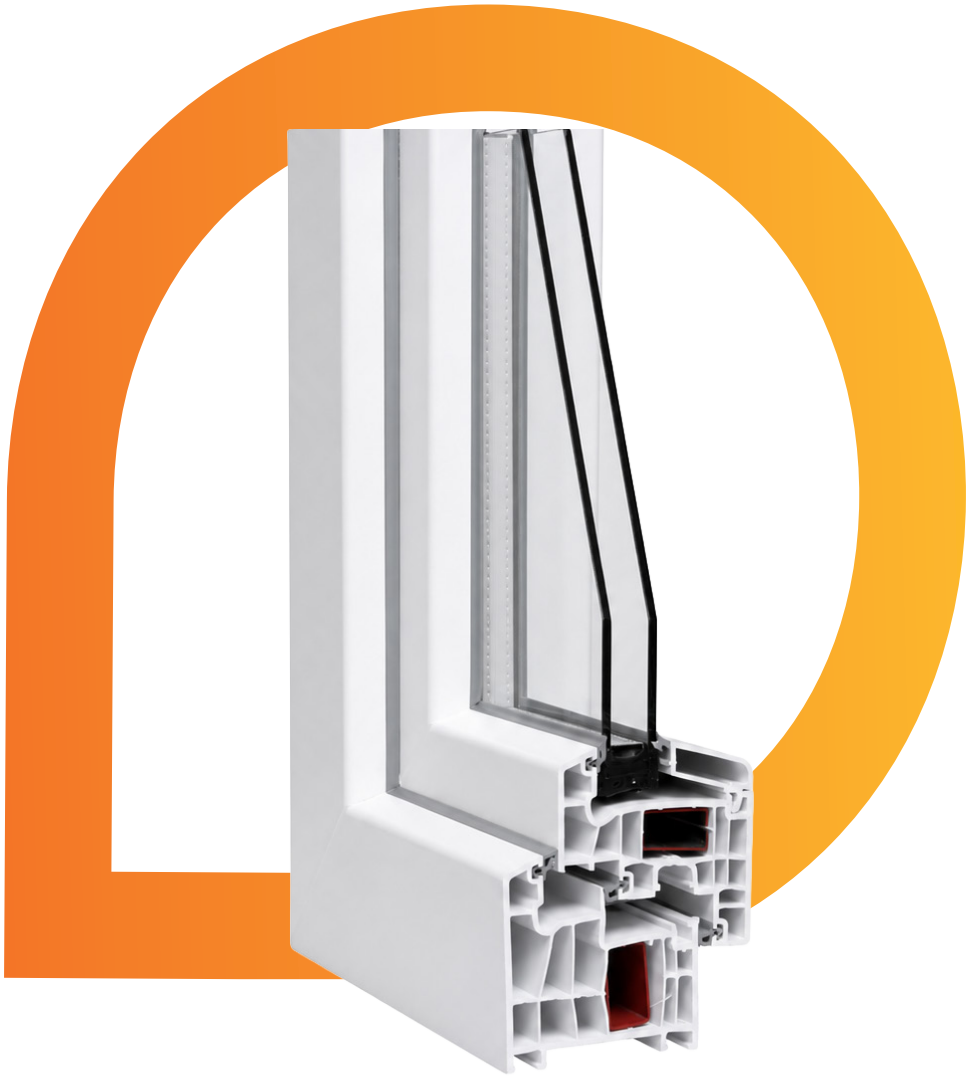

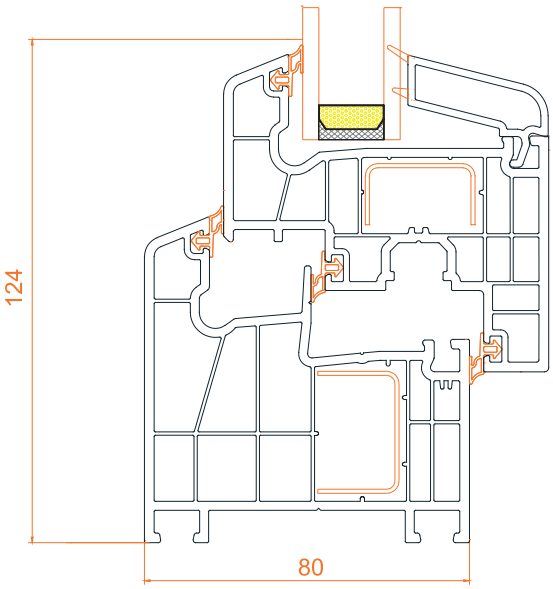

Window Assembly

TECHNICAL DATA

Profile Width: 80
Number of Chambers: 8
Profile Class: Class A (TS EN 12608-1)
Gasket System: Inner-Outer Triple
Glass Thicknesses (mm): 24, 32 mm
Insulation Value: Uf 0.90 W/m²K
Profile Wall Thickness: 2.4

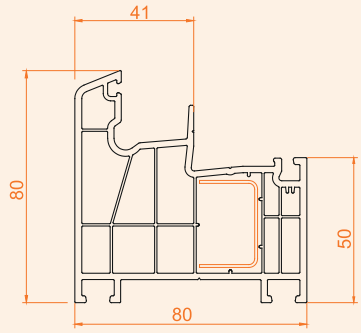

Frame Profile
8 Chambers

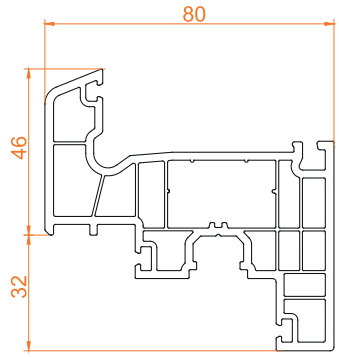

Sash Profile
6 Chambers

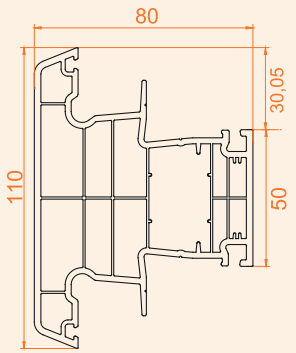

Mullion Profile
6 Chambers

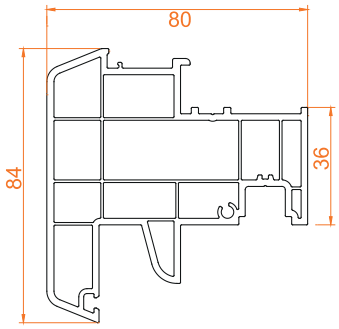

Moving Mullion Profile

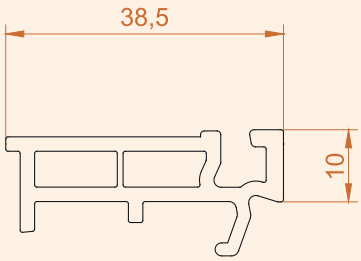

Glazing Bead Holder Profile

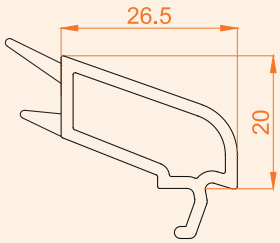

32 mm Triple Glazing Bead

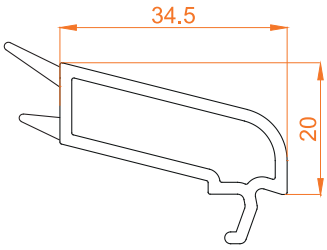

20 mm Double Glazing Bead



easy slide

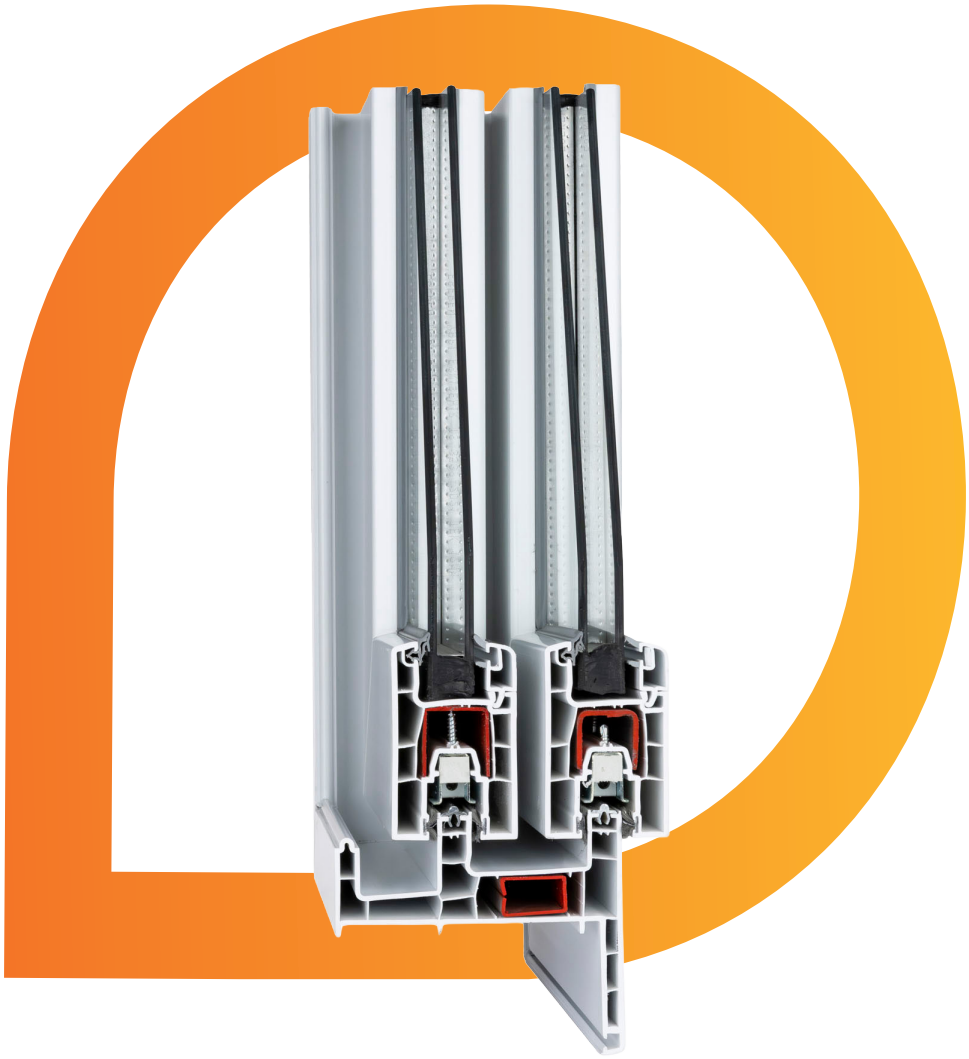

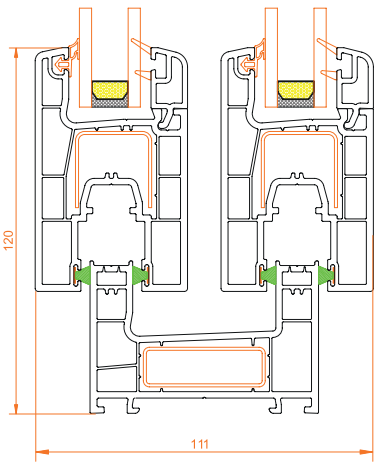

Double Rail Assembly

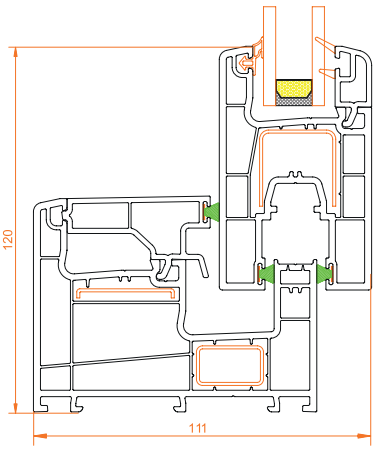

Single Rail Assembly

TECHNICAL DATA

Profile Width: 75 mm double-rail frame option, 92.5 mm single-rail frame option and 50 mm wide sliding sash profile.
Number of Chambers: 3
Profile Class: Class B (TS EN 12608-1)
Gasket System: Gasket and Brush Seal
Glass Thicknesses (mm): 4-6, 20, 24 mm
Insulation Value: Uf 1.80 W/m²K
Uf 2.10 W/m²K
Profile Wall Thickness: 2.4

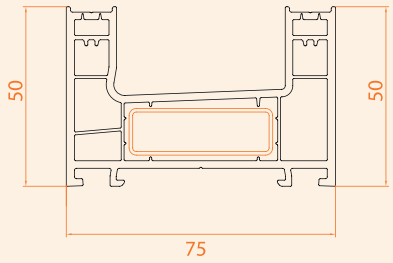

Frame Profile
Double Rail

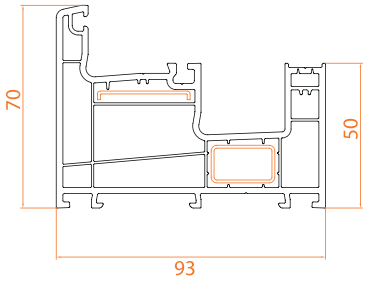

Fixed Frame
Single Rail

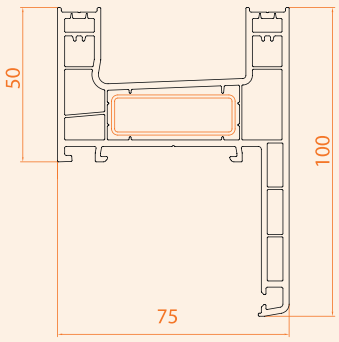

Frame Profile with Sill
Double Rail

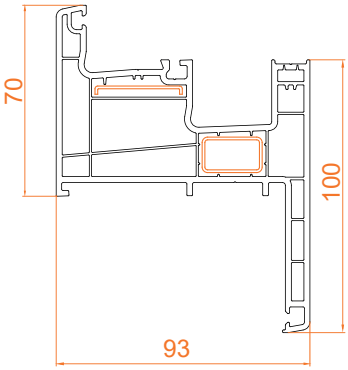

Fixed Frame Profile with Sill
4 Chambers

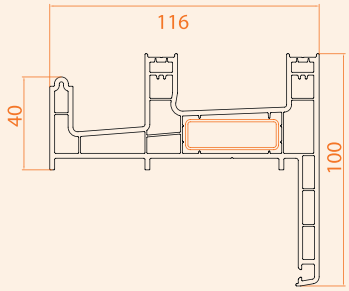

Frame Profile; Double Rail, with Fly Screen, 40 mm Sill

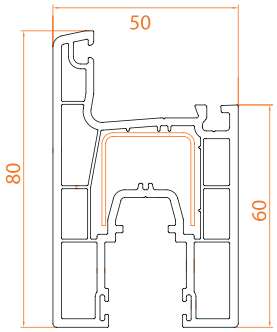

Sash Profile

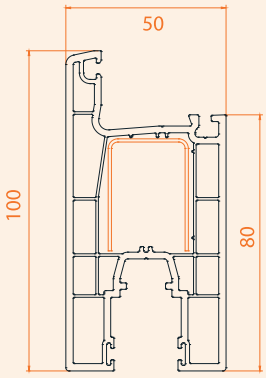

Wide Sliding Sash Profile

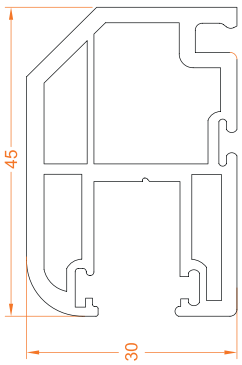

Fly Screen Sash Profile

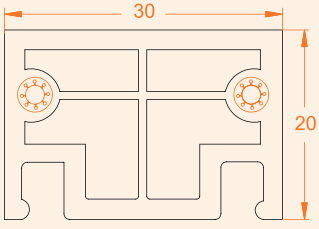

Fly Screen Mullion Profile

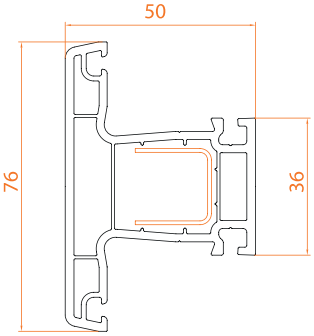

Mullion Profile

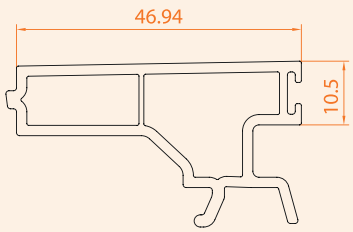

Frame Channel Cover Profile

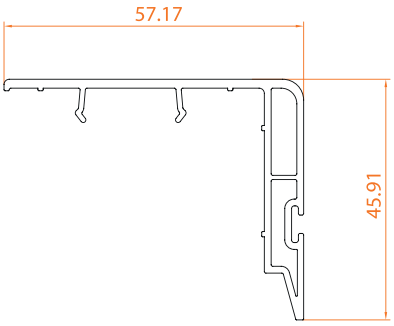

Sliding Sash Adaptor

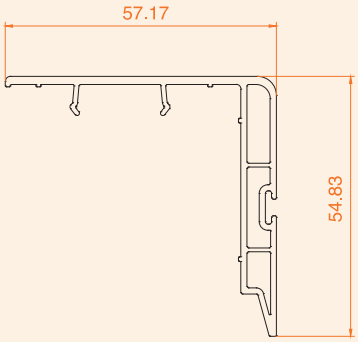

Wide Sliding Sash Adaptor

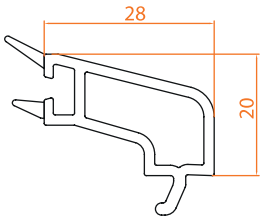

4 mm Single Glazing Bead

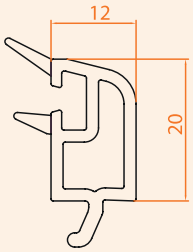

20 mm Double Glazing Bead

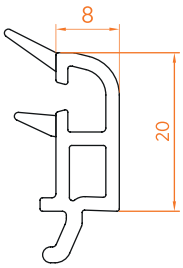

24 mm Double Glazing Bead



isotherm



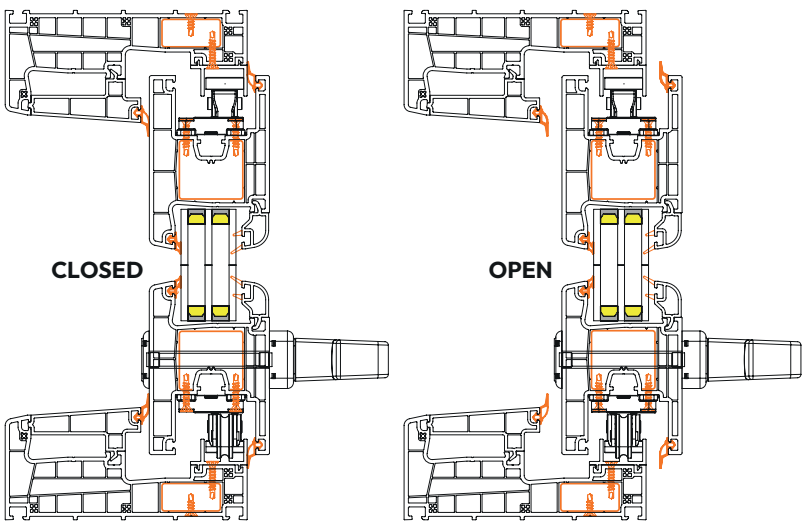

Isotherm Insulated Sliding System Assembly

TECHNICAL DATA

Profile Width: 141 mm frame, 70 mm sash, 70 mm mullion
Number of Chambers: 4
Profile Class: Class B (TS EN 12608-1)
Gasket System: Inner-Outer Double TPE
Glass Thicknesses (mm): 4-6, 20, 24, 32 mm
Insulation Value: Uf 1.40 W/m²K
Profile Wall Thickness: 2.4

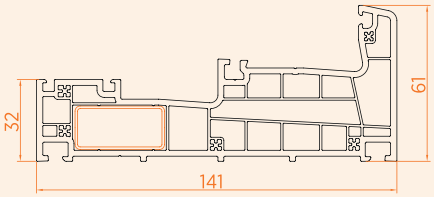

Insulated Sliding Frame Profile

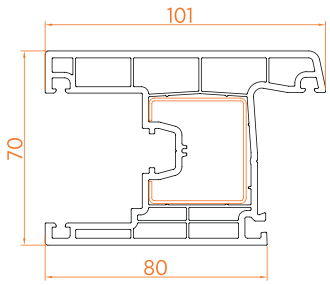

Insulated Sliding Sash Profile

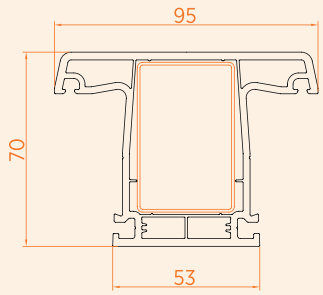

Insulated Sliding Mullion Profile

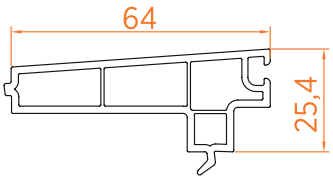

Fixed Frame Cover

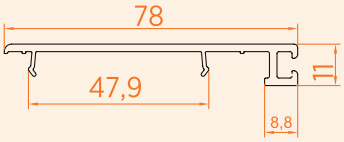

Sash Cover Profile

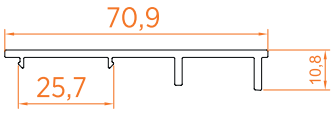

Frame Threshold Cover Profile

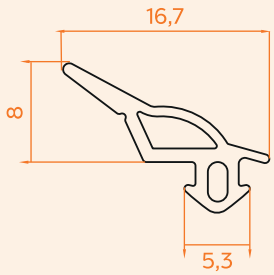

Flat Gasket

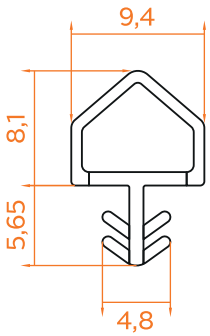

Balloon Gasket

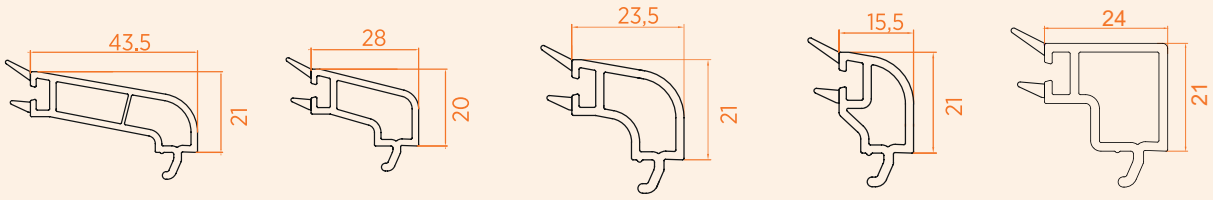

- **4 mm Single Glazing Bead**
- **20 mm Double Glazing Bead**
- **24 mm Double Glazing Bead**
- **32 mm Triple Glazing Bead**
- **24 mm Square Bead**

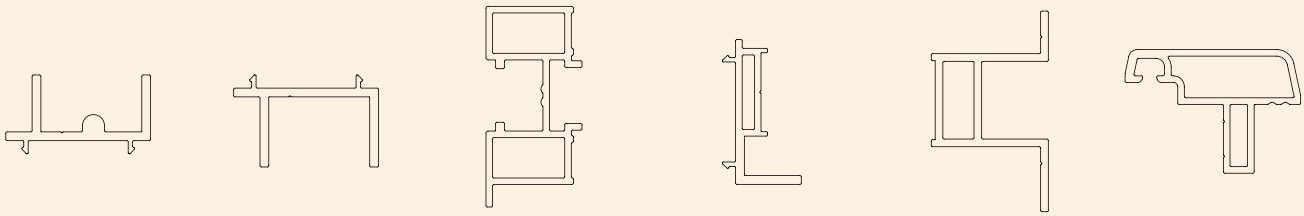

- **Bottom Centering Rail**
- **Top Centering Rail**
- **Espagnolette Channel Holder**
- **Espagnolette Lock Centering**
- **4-Sash Mid Connector**
- **4-Sash Locking**

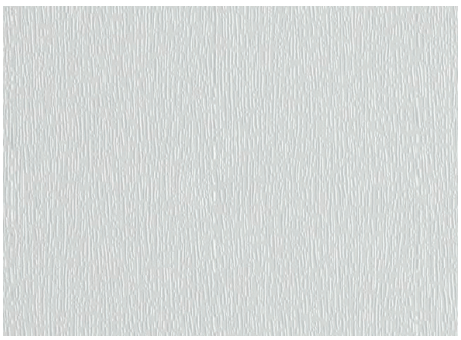

Crystal - ST517



Dark Anthracite Grey - BS516

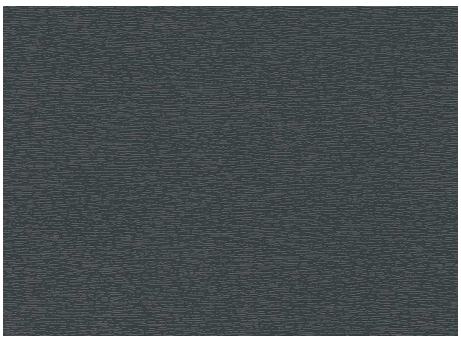

Anthracite Grey - ST508



AnTEAK



Polish Pine



Golden Oak - ST570



Dark Oak - ST541



New Dark Oak - ST561



Bog Oak - ST503



Matte Black - AS520

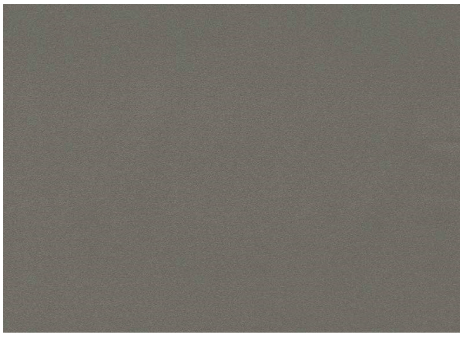

Sand Grey (Mink) - AS509

www.baumannpvc.com
info@baumannpvc.com
0850 441 66 11

baumann
Doğru Pencere


ESEREN
GROUP
baumann



baumann
Doğru Pencere

İmişehir Organized Industrial Zone, 2003. Cadde No: 21,
ESKİŞEHİR/TÜRKİYE

www.baumannpvc.com

info@baumannpvc.com

0850 441 66 11

ESEREN
group